_____CSE 2201 (2204) - Computer Organization (Final 2005 - 18.01.2006) _____

**************************(You can only chose one of the questions from each group : QXa or QXb)**************************

Q1a. a. What are the main functions of any general-purpose computer? Briefly explain.
b. Write and briefly explain principle I/O techniques used in computer systems.

A1a. *a.* ***Data processing****: Data processing is performed by the CPU;*
Data storage*: Data is stored in the memory*
Data movement*: I/O moves data between the computer and its peripherals*
Control*: A control unit manages the computer's resources and orchestrates the performance of its functional parts in response to the instructions.*
b. ***Programmed I/O****: The processor issues an I/O command, on behalf of a process, to an I/O module; that process then busy-waits for the operation to be completed before proceeding.*
Interrupt-driven I/O*: The processor issues an I/O command on behalf of a process, continues to execute subsequent instructions, and is interrupted by the I/O module when the latter has completed its work. The subsequent instructions may be in the same process, if it is not necessary for that process to wait for the completion of the I/O. Otherwise, the process is suspended pending the interrupt and other work is performed.*
Direct memory access (DMA)*: A DMA module controls the exchange of data between main memory and an I/O module. The processor sends a request for the transfer of a block of data to the DMA module and is interrupted only after the entire block has been transferred.*

Q1b. a. Write and briefly explain the major functions or requirements for an I/O module.
b. What are the main components of any general-purpose computer? Briefly explain.

A1b. *a.* ***Control & Timing****: Coordinates the flow of traffic between internal resources and external devices.*
CPU Communication*: I/O module must perform command decoding, exchange data between CPU and the I/O module, report the status, and recognize one unique address for each peripheral it controls.*
Device Communication*: I/O module must be able perform device communication and involves commands, status information, and data.*
Data Buffering*: I/O module must be able to operate at both device and memory speeds.*
Error Detection*: I/O module is responsible for error detection and for subsequently reporting errors to the processor.*
b. ***Central processing unit (CPU)****: Controls the operation of the computer and performs its data processing functions.*
Main memory*:Stores both data and instructions.*
Input and output (I/O) equipment*: Moves data between the computer and its external environment.*
System interconnection*: Some mechanism that provides for communication among CPU, main memory, and I/O.*

Q2a. Consider a machine with a byte addressable main memory of 2^{16} bytes and block size of 8 bytes. Assume that a direct mapped cache consisting of 32 lines is used with this machine.
a. How is a 16-bit memory address divided into tag, line number, and byte number?
b. Into what line would bytes with each of the following addresses be stored?
i. 0001 0001 0001 1011 ii. 1100 0011 0011 0100

A2a. *a.* *tag id = 8 bits, line id = 5 bits, word id: 3 bits*
b. *i. 00010001 00011 011 ➔ line id = 03* *ii. 11000011 00110 100 ➔ line id = 06*

Q2b. An 8 bit microprocessor system has 9 address lines to address relevant memory locations.
a. Assuming that the data size is 1 byte, what is the address of the last memory location?
b. Design the required memory system using memory chips organized as 256x8 bits.

A2b. *a. Address of the last memory location =* 2^9*-1 = 511*

b.

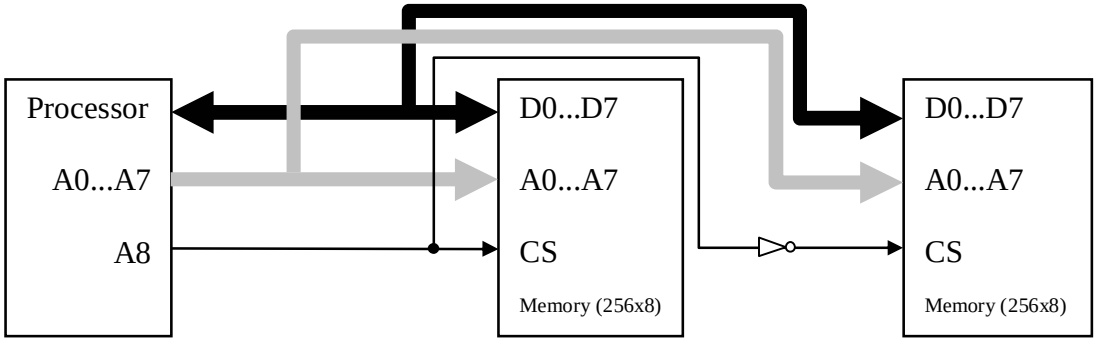

Q3a. Write the memory hierarchy in a computer system.

A3a. *Registers, L1 Cache, L2 Cache, Main memory, Disk cache, Disk, Optical, Tape*

Q3b. Classify and describe registers that a CPU consists of.

A3b. *User Visible Registers: General Purpose, Data, Address, Condition Codes*
Control & Status Registers: Program Counter, Instruction Decoding Register, Memory Address Register, Memory Buffer Register

---

Q4a. In a computer system, address 200 contains binary value 00001010. What would be the contents of accumulator after running the following assembler code. Explain what happens. (LROTATE: left rotate; ASHIFTR: arithmetic shift right)

LOAD IMMEDIATE 11000010
LROTATE
ADD DIRECT 200
ASHIFTR

A4a.

LOAD IMMEDIATE 11000010	*AC ← 11000010 (Immediate binary data 11000010 is loaded to the AC)*
LROTATE	*AC ← 10000101 (Contents of the AC is rotated to the left)*
ADD DIRECT 200	*AC ← 10001111 (Contents of the memory location 200 is added to the AC)*
ASHIFTR	*AC ← 11000111 (Contents of the AC is arithmetically shifted to the right)*

Q4b. Given the binary number 1010, do the following binary arithmetic operation: 1111-1010+1.
After the operation what can you say about the result? Explain.

A4b. *1111-1010+1 = 0110.*
1010 and 0110 are twos complement of each other. In fact, the operation is one of the descriptions of twos complement operation.

Q5a. Given $x = 010$ and $y = 110$ in twos complement notation, compute the product $p = x \times y$ with Booth's algorithm.

A5a.

A	***Q***	Q_{-1}	***M***	***Process***
000	*110*	*0*	*010*	*Initial*
000	*011*	*0*	*010*	*aShift*
110	*011*	*0*	*010*	$A \leftarrow A - M$
111	*001*	*1*	*010*	*aShift*
111	*100*	*1*	*010*	*aShift*

Result = 111100 = -4 (in 2s complement)

The following solution is also possible:

A	***Q***	Q_{-1}	***M***	***Process***
000	*010*	*0*	*110*	*Initial*
000	*001*	*0*	*110*	*aShift*
010 *001*	*001* *000*	*0* *1*	*110* *110*	$A \leftarrow A - M$ *aShift*
111	*000*	*1*	*110*	$A \leftarrow A + M$
111	*100*	*0*	*110*	*aShift*

Result = 111100 = -4 (in 2s complement)

Q5b. A computer system has the following floating point format:

1 bit sign	5 bits biased exponent	10 bits mantissa

If the given number is 19.75, determine the following values:

a(5). Corresponding binary number

b(5). Corresponding hexadecimal number

c(10). Corresponding 16 bit floating point number

A5b.

a. $(19.75)_{10} = (10011.11)_2$

b. $(19.75)_{10} = (0001\ 0011.1100)_2 = (13.C)_{16}$

c. $(19.75)_{10} = (10011.11)_2 \Rightarrow (1.001111 \times 2^{00100+01111})_{\text{biased exponential format}} = (1.001111 \times 2^{10011})_{\text{biased exponential format}}$

$S = 0,\ BE = 10011,\ M = 0011110000 \rightarrow (19.75)_{10} = (0\ 10011\ 0011110000)_{\text{floating pointformat}}$