Name-surname : **Signature:**
Student no :

Makeup Exam (28.12.2006)

____CSE2201(2204)- Computer Organization, SENG2201- Computing Systems ___

1(20). How are data read from a magnetic disk? Explain

The read head consists of a partially shielded magnetoresistive (MR) sensor. The MR material has an electrical resistance that depends on the direction of the magnetization of the medium moving under it. By passing a current through the MR sensor, resistance changes are detected as voltage signals.

2(20). A computer system uses an 8 bit microprocessor having 8 address lines to address relevant memory locations (a partial block diagram is shown below). You are asked to add a number of external devices to the computer system using 82C55 PPI chip. Design the required circuit for mapping PPI chip to the addresses 70, 71, 72, 73 (addresses are in hexadecimal).

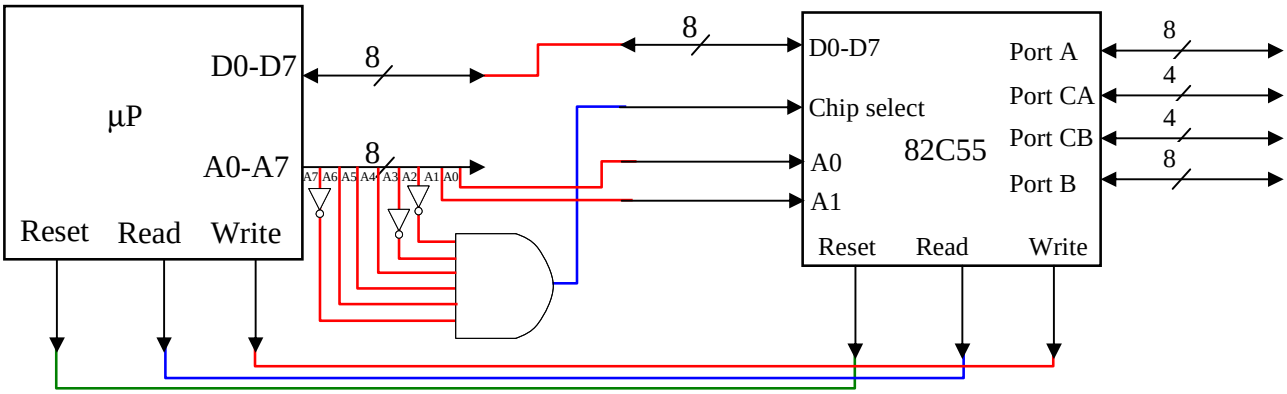

3(20). What is an operating system? List and briefly define key services provided by an operating system

The operating system (OS) is the software that controls the execution of programs on a processor and that manages the processor's resources.

Program creation: The operating system provides a variety of facilities and services, such as editors and debuggers, to assist the programmer in creating programs.
Program execution: A number of tasks need to be performed to execute a program. Instructions and data must be loaded into main memory, I/O devices and files must be initialized, and other resources must be prepared.
Access to I/O devices: Each I/O device requires its own peculiar set of instructions or control signals for operation.
Controlled access to files: In the case of files, control must include an understanding of not only the nature of the I/O device (disk drive, tape drive) but also the file format on the storage medium.
System access: In the case of a shared or public system, the operating system controls access to the system as a whole and to specific system resources.
Error detection and response: A variety of errors can occur while a computer system is running.
Accounting: A good operating system will collect usage statistics for various resources and monitor performance parameters such as response time.

4(20). 1011 and 1101 are two unsigned integers. Find the multiplication of these numbers by using multiplication algorithm.

If Q = 1011 and M = 1101, then the solution:

	C	A	Q	M	Process
	0	0000	1011	1101	Initial
Step 1	0	1101	1011	1101	A ← A + M
	0	0110	1101	1101	Shiftr through C,A, and Q
Step 2	1	0011	1101	1101	A ← A + M
	0	1001	1110	1101	Shiftr through C,A, and Q
Step 3	0	0100	1111	1101	Shiftr through C,A, and Q
Step 4	1	0001	1111	1101	A ← A + M
	0	1000	1111	1101	Shiftr through C,A, and Q

Result is in registers A and Q

5(20). In a computer system, a small part of memory is given in the following table. What would be the contents of accumulator after running the following assembler code.

All values are in hexadecimal.

LOAD ABSOLUTE A1
RROTATE
ADD INDIRECT A4
AND IMMEDIATE AA
SUB DIRECT A2
SHIFTL

Mem. Adress	Data
A0	A4
A1	A3
A2	22
A3	3A
A4	A1

LOAD ABSOLUTE A1	Acc = $(1010\ 0001)_2$	= $(A1)_{16}$
RROTATE	Acc = $(1101\ 0000)_2$	= $(D0)_{16}$
ADD INDIRECT A4	Acc = $(1101\ 0000 + 1010\ 0011)_2 = (0111\ 0011)_2$	= $(73)_{16}$
AND IMMEDIATE AA	Acc = $(0111\ 0011 \text{AND} 1010\ 1010)_2 = (0010\ 0010)_2$	= $(22)_{16}$
SUB DIRECT A2	Acc = $(0010\ 0010 - 0010\ 0010)_2 = (0000\ 0000)_2$	= $(00)_{16}$
SHIFTL	Acc = $(0000\ 0000)_2$	= $(00)_{16}$